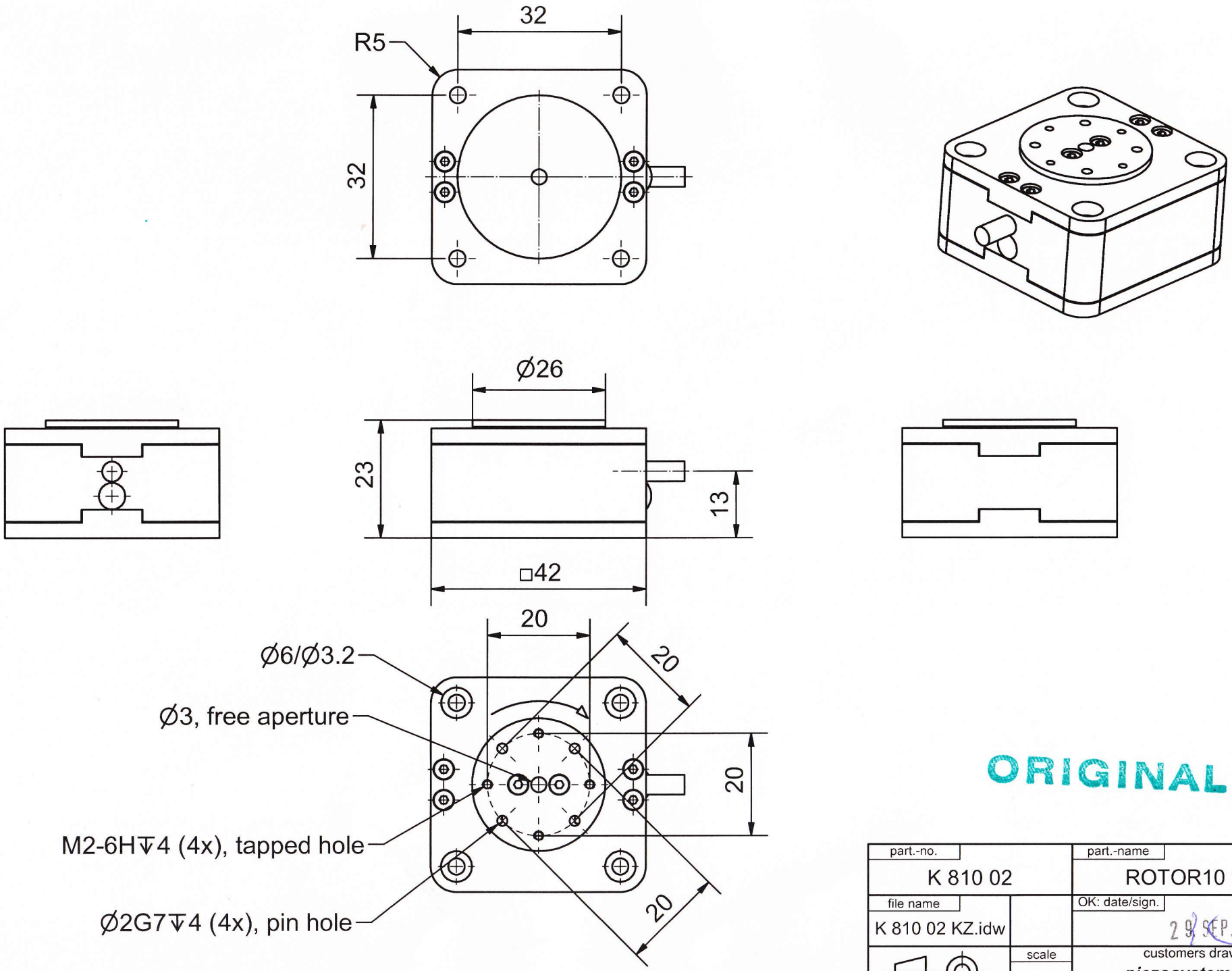

ORIGINAL

part.-no.	part.-name
K 810 02	ROTOR10 VAC
file name: K 810 02 KZ.idw	OK: date/sign. 29 SEP. 2009
scale 1:1	customers drawing *piezosystem jena*